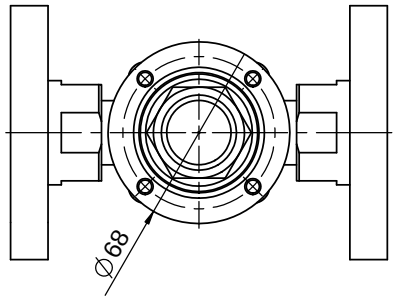

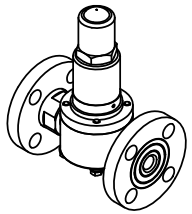

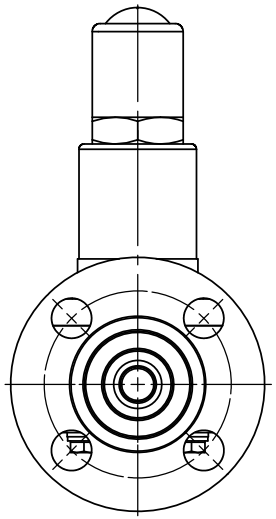

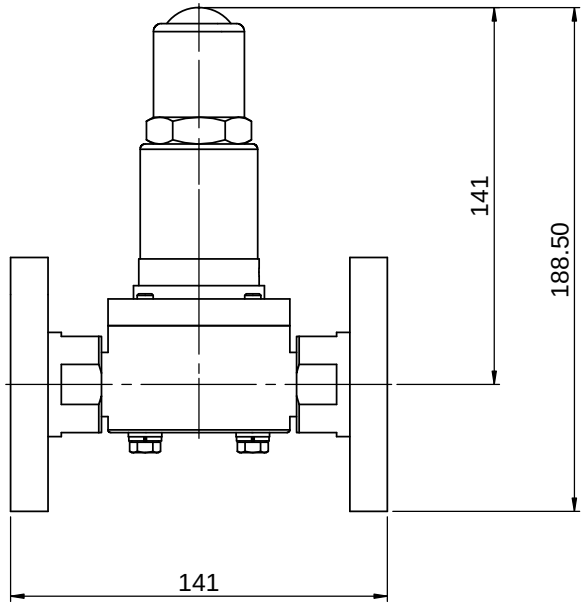

UNLESS OTHERWISE SPECIFIED: DIMENSIONS ARE IN MILLIMETERS SURFACE FINISH: TOLERANCES: LINEAR: ANGULAR:	FINISH:				DEBUR AND BREAK SHARP EDGES	
	NAME	SIGNATURE	DATE			
DRAWN	W. PARK					
CHK'D	W. PARK					
APPV'D	S.C. KIM					
MFG						
Q.A				MATERIAL: PTFE		
				WEIGHT:		

DO NOT SCALE DRAWING | REVISION

E-WHA CHEMICAL FEEDER CO., LTD.

TITLE:

DIMENSIONAL OUTLINE EWBV-T-15A

DWG NO. U1000E1001B | A3

SCALE:1:2 | SHEET 1 OF 1