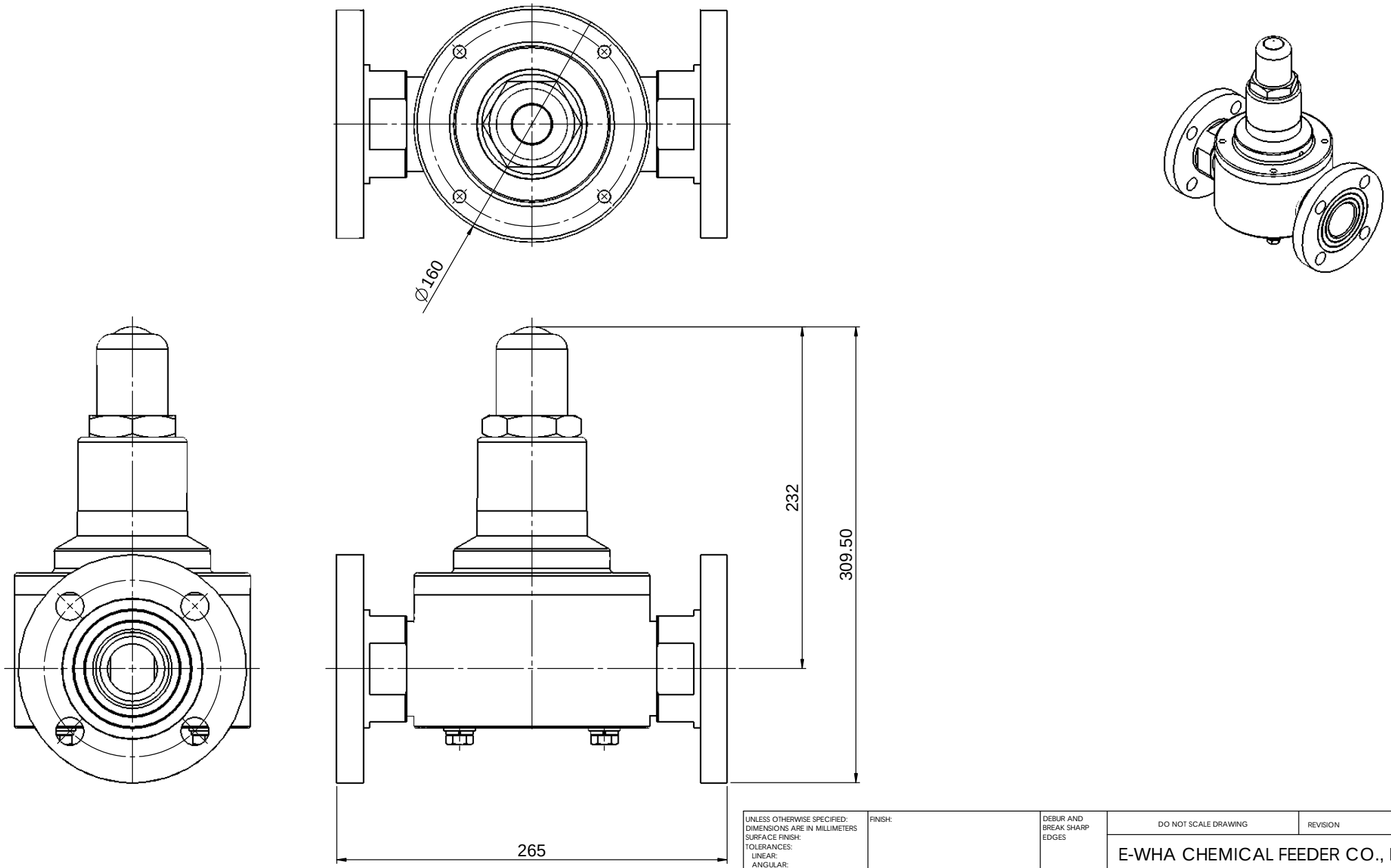

UNLESS OTHERWISE SPECIFIED: DIMENSIONS ARE IN MILLIMETERS SURFACE FINISH: TOLERANCES: LINEAR: ANGULAR:	FINISH:			DEBUR AND BREAK SHARP EDGES	DO NOT SCALE DRAWING	REVISION
					E-WHA CHEMICAL FEEDER CO., LTD.	
	NAME	SIGNATURE	DATE		TITLE: DIMENSIONAL OUTLINE EWBV-T-50A	
DRAWN	W. PARK					
CHK'D	W. PARK					
APPV'D	S.C. KIM					
MFG						
Q.A				MATERIAL: PTFE	DWG NO. U1000E1005B	A3
				WEIGHT:	SCALE:1:2	SHEET 1 OF 1