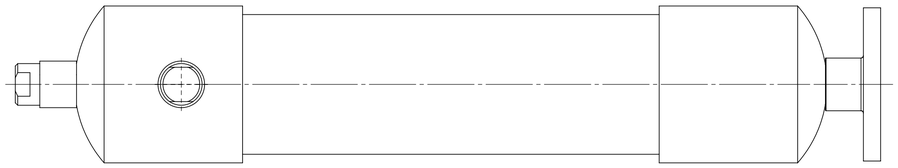

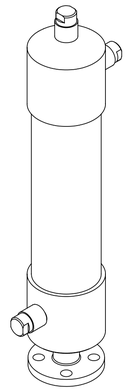

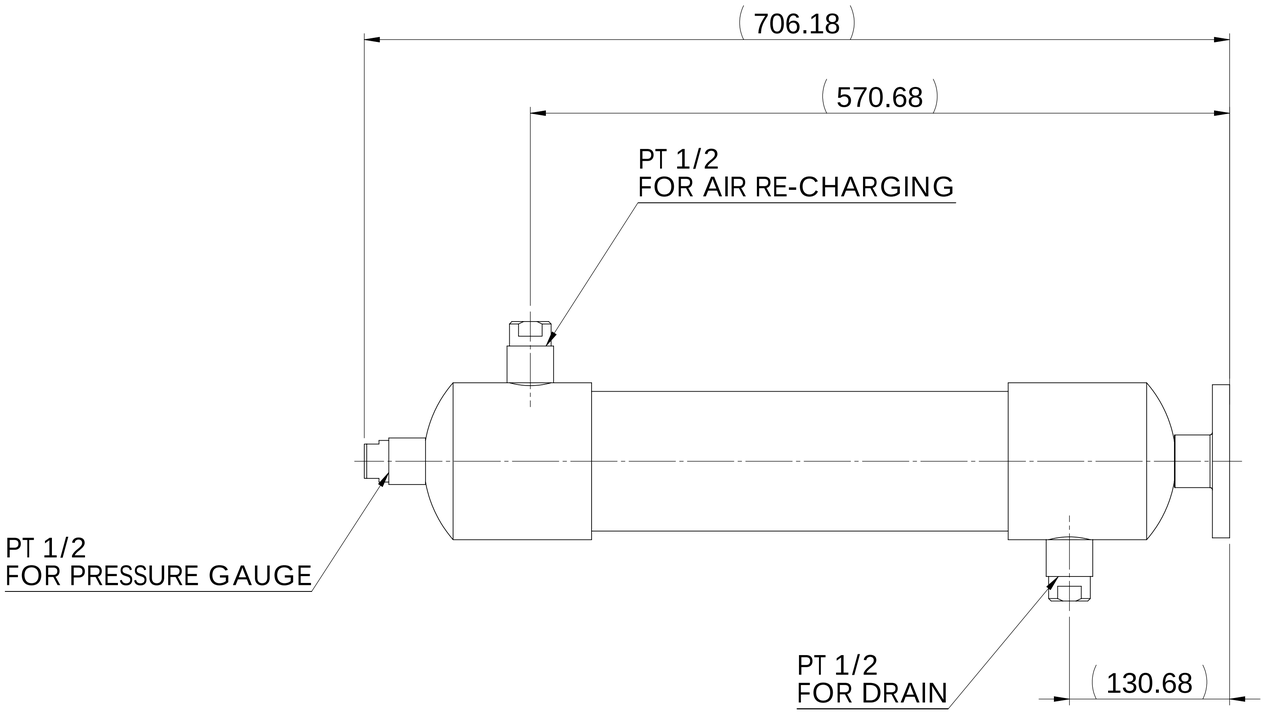

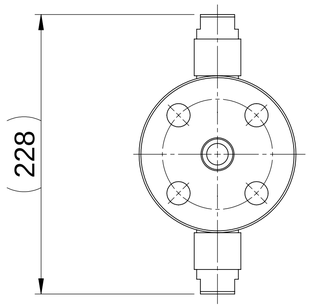

UNLESS OTHERWISE SPECIFIED: DIMENSIONS ARE IN MILLIMETERS SURFACE FINISH: TOLERANCES: LINEAR: ANGULAR:	FINISH:				DEBUR AND BREAK SHARP EDGES	DO NOT SCALE DRAWING / REVISION
						E-WHA CHEMICAL FEEDER CO., LTD.
	NAME	SIGNATURE	DATE			TITLE: AIR CHAMBER EAC4000-P25A for GM10L
DRAWN	W. PARK					
CHK'D	W. PARK					
APPV'D	S.C. KIM					
MFG						
Q.A				MATERIAL: PVC		DWG NO. A3
				WEIGHT:		SCALE:1:5 / SHEET 1 OF 1